terneo

smart control of heating

BeeRT

Technical data sheet and
installation and operation manual

Terneo BeeRT thermostat is designed to control electric heating systems based on electrode or heating element boilers with the ability to control the operation of the pump and monitor its serviceability. terneo BeeRT also allows you to connect an external programmer for maximum comfort and energy savings.

Thermostat ensures comfortable and safe operation of boiler due to regulation of «feed» and «return» temperature. The heating starts when the «return» temperature drops to hysteresis value and is turned off when the «feed» or «return» temperature reaches the set value.

Non-volatile thermostat storage saves all settings in the event of a power outage.

IMPORTANT. Before the installation and operation of the device, please read by the end of this document. This will help to avoid possible danger, mistakes and misunderstandings.

TECHNICAL DATA

Limits of regulation of «feed»	15–95 °C, step 1 °C
Limits of regulation of «return»	5–90 °C, step 0,1 °C
Temperature hysteresis	1–30 °C, step 0,1
Pump overrun time	10–60 sec
Maximum load current (for category AC-1)	2 x 16 A
Rated load capacity (for category AC-1)	2 x 3 000 VA
Input voltage	230 V ±10 %
Weight in the complete set	0,26 kg ±10 %
Overall dimensions (w × h × d)	52 × 90 × 67 mm
Temperature sensor	R10 in heat shrink
The length of the sensor connected cable	4 m
Number combinations under heat, at least	50 000 cycles
Number of combinations without heating, no less than	20 000 000 cycles
Connection	no more than 2,5 mm²
Degree of protection GOST14254	IP20

IN THE BOX

Thermostat	**1 piece**
Temperature sensor with connecting wire	**2 piece**
Technical data sheet and installation and operation manual and warranty card	**1 piece**
The packing box	**1 piece**

WIRING

Thermostat supports two types of sensors: analog sensor (R10) or digital sensor (D18).

Connect the analog red «feed» temperature sensor to terminals 1 and 2. Digital sensor is connected to terminal 1 using red (or yellow) wire and to terminal 2 using white wire.

Connect the analog blue «return» temperature sensor to terminals 5 and 6. Digital sensor is connected to terminal 5 using red (or yellow) wire and to terminal 6 using white wire.

Be sure to select the type of sensor in the functional menu of the thermostat when using a digital sensor (see Table 1, menu item «Selecting the type of sensor»). If sensors are connected incorrectly or one of them fails, when the thermostat is turned on, eights are displayed on the screen for 5 seconds, and then «OC» or «SC» (see page 7).

The supply voltage (230 V ±10 %, 50 Hz) is supplied to terminals 9 (phase, L) and 10 (zero, N).

Terminals 7 and 8 (voltage-free relay contacts) are used to control the pump.

Terminals 11 and 12 (voltage-free relay contacts) are used to control the boiler heater.

The contact group of the temperature programmer is connected to terminals 3 and 4.

INSTALL AND CHECK THE LOAD before installing and connecting the thermostat.

POWER OF AUTOMATICS, POWER RELAY, magnetic starter should be chosen based on maximum power of the boiler.

FOR THE OPERATION OF THE PUMP AND THE BOILER, CONNECT APPROPRIATE PHASES TO THE CONTROL RELAYS of BeeRT for switching, since the relay contacts do not have a galvanic connection with the power supply circuits, that is, the relays used in the thermostat have a «dry normally open contact» (see Wirings 1, 2).

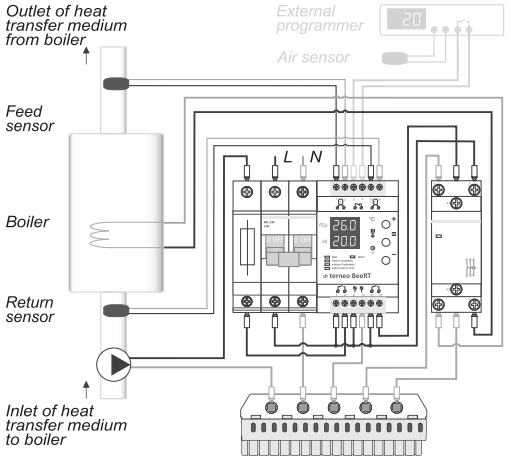

Wiring 1. Connecting a single-phase boiler using a power relay

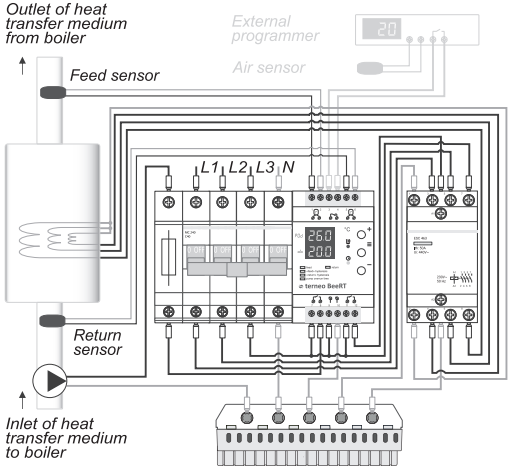

Wiring 2. Connecting the automation of a 3-phase boiler

INSTALLATION

The thermostat is designed for indoor installation. The ingress risk of moisture or liquid into the place of installation must be minimized. The ambient temperature during installation must be between –5 ... + 45 °C. The installation height of the thermostat should be in the range 0,4...1,7 m above the floor level.

The thermostat should be mounted in a special cabinet, which allows accessible installation and operation. The cabinet must be equipped with a standard 35 mm mounting rail (DIN-rail). The temperature controller has width of three standard 18 mm modules.

It is necessary for the temperature controller to switch the current to no more than 2/3 of the maximum current specified in the specification. If the current exceeds this value, the load must be connected through a contactor (magnetic actuator, power relay), which is optimized for this current (Wiring 1).

In order to protect from short circuits and excess power events appearance in the load circuit, it is necessary to install an automatic circuit breaker (CB), which should be installed in the live wire break, as shown on Wiring 1.

The thermostat terminals are designed for a wire with section not more than 2,5 mm^2. To reduce the mechanical loads on the terminals it is desirable to use a soft wire. The wires are tightened in the terminals using a screwdriver with a blade width no more than 3 mm. The terminals should be tighten with torque 0,5 N·m. **Use of aluminum is not desirable**. The screwdriver with a blade width more than 3 mm can cause mechanical damage to the terminals. This may result in the loss of right for warranty.

If necessary, it is allowed to shorten and expand sensor connecting wires (separate cable not more than 40 m). Power wires should not be placed near connection wire of sensor otherwise they may cause interference.

WARRANTY TERMS

The warranty for **terneo** devices is valid for **36 months** from the date of sale, provided that the instructions are followed. The warranty period for products without a warranty certificate is counted from the date of production.

If your device is not working properly, we recommend that you first read the section «Possible problems». If you cannot find an answer, contact Service Center. In most cases, these actions resolve all issues.

If you continue to have issues with the device, please send it to a Service Center or to the store where you purchased the device. If your device is defective due to our fault, we will repair or replace it under warranty within 14 business days.

Please see the full text of the warranty and the data you need to send to your Service Center on the website https://www.ds-electronics.com.ua/en/. If you have a warranty case, please, contact the General distributor in your area.

terneo

SERVICE CENTER CONTACT
+38 (091) 481-91-81
Viber WhatsApp Telegram
support@dse.com.ua

WARRANTY CARD

serial №:

date of sale:

a seller, a seal:

place of a seal

an owner contact
for a service center:

EXPLOITATION

Use the **«≡»** button to select the desired menu item. Use **«+»** or **«–»** to change the parameters. Temperature display returns after 5 sec after the last pressing the buttons.

For the operation of the boiler, set the main parameters: the temperature and hysteresis of «return» and «feed», as well as the run-out time of the pump. To prevent incorrect settings when BeeRT cannot turn on the heating, the lower value of the «feed» temperature in the thermostat is limited by the «return» temperature.

Set «return» temperature
(factory setting 50 °C)



The «return» temperature is the temperature of the coolant at the inlet to the boiler. The air temperature in the room is selected according to it.

It is displayed on the bottom screen of the thermostat. **To view and change**, press the **«–»** button. Next press **«+»** or **«–»** to change the temperature value.

Set «feed» temperature (factory setting 70 °C)



The «feed» temperature is the temperature of the coolant at the outlet of the boiler. The value of this temperature determines the heating rate of the room and the temperature of the radiators. Once temperature is reached, the top screen will flash.

To view and change, press the **«+»** button. Next press **«+»** or **«–»** to change the temperature value.

Reset to the factory settings

To reset the factory settings, hold the three buttons at the same time for more than 12 sec until **«dEF»** message appears on the screen. After release it will reset to the factory settings and reboot.

View firmware version

Hold down the **«≡»** button for 6 seconds.
The manufacturer reserves the right to modify the firmware to enhance the device technical characteristics.

Button blocking (child and public protection)

In order to enable (disable) button blocking press the **«+»** and **«–»** buttons at the same time for 6 seconds till the **«Loc»** (**«unLoc»**) sign appears on the screen.

Table 1. FUNCTION MENU

Menu section	Press «≡»	Screen	Notes
«Feed» hysteresis (factory setting «5,0», range 1–30 °C, step — 0,1 °C)	1 time		Hysteresis is the difference between the switch-off and switch-on temperature of the boiler. Reducing the hysteresis allows for faster heating of the heating system. The increase reduces the wear of the contact groups of the starting equipment. We recommend installing: — «feed» hysteresis is within the range of 5–10 °C; — «return» hysteresis is within the range of 2–6 °C.
«Return» hysteresis (factory setting «5,0», range 1–30 °C, step — 0,1 °C)	2 times		
Pump overrun time (factory setting 15 sec, range 10–60 sec, step — 1 sec)	3 times		The additional running time (overrun) of the pump before turning on and after turning off the boiler optimizes the operation of the boiler and reduces energy consumption. Pump operation before turning on the boiler equalizes the temperature of the coolant in the entire system. The operation of the pump after the boiler is turned off eliminates the local concentration of the heated coolant.
Selection of the type of external programmer control (factory setting «nc», can be changed to «no»)	4 times		If external programmer has normally closed contacts, then select «nc». If it has normally open contacts, select «no». Contacts of the external programmer should not have galvanic connection with power supply circuits.
Correction of the «feed» temperature on the screen (factory setting 0, range ±9,9 °C, step 0,1 °C)	5 times		If necessary, correct the «feed» temperature display on the thermostat screen.
Correction of the «return» temperature on the screen (factory setting 0, range ±9,9 °C, step 0,1 °C)	6 times		If necessary, correct the «return» temperature display on the thermostat screen.
Selecting the type of sensor «feed» (factory setting «10r», can be changed to «d18»)	7 times		By default, the analog R10 sensor, which is included into the scope of supply, is selected. In case of replacing the sensor with a digital sensor D18, select «d18».
Selecting the type of sensor «return» (factory setting «10r», can be changed to «d18»)	8 times		

Operation principle of terneo BeeRT thermostat with external programmer

The programmer controls the heating system based on set schedule. To achieve savings, for example, on weekdays, when everyone is at work, the programmer turns off the boiler by blocking the operation of terneo BeeRT.





When terneo BeeRT thermostat is blocked by the programmer, **«–0–»** and «feed» temperature will flash alternately on the upper screen.

POSSIBLE PROBLEMS, CAUSES AND WAYS TO OVERCOME THEM

Load is off, screen and indicator are off

Possible cause: No power supply.

It is necessary: make sure that the supply voltage at terminals 9 and 10 is available. If power supply is available, contact the Service Center.

On the thermostat screen «OC» or «SC»

The upper screen displays the failures of the «feed» sensor, the lower one displays failure of «return» sensor. The inscription **«OS»** means a sensor failure while **«SC»** means short circuit.







Possible cause: damage to the sensor and its circuit, incorrectly selected sensor type in the thermostat settings.

It is necessary: to check the integrity of the sensor and the absence of mechanical damage to its circuit, the absence of power wires that are laid close. Make sure that the appropriate type is selected in the sensor settings (see Table 1).

On the screen of the thermostat, the temperature froze at the level of 98 ... 105 °C, the measured temperature does not correspond to the actual one



Possible cause: in the settings, the type of sensor R10 is selected instead of which the digital sensor D18 is connected and its connection does not meet the requirements (see page 2).

It is necessary: check the correct connection of the digital sensor and its compliance with the type in the thermostat settings.

ADDITIONAL INFORMATION

Do not fire and do not throw away the device with the household waste.

After the end of its service life, the product must be disposed of in accordance with applicable law.

Transportation of goods carried in the package, ensuring the safety of the product.

The device is transported by any kind of transport (rail, sea, motor, air transportation).

Date of manufacture is on the back side of device. Application time is unlimited.

The device does not contain harmful substances.

If you have any questions or you something will not clear, call the Service centre the telephone number listed below.

SAFETY INSTRUCTIONS

Carefully read and become aware of yourself these instructions.

Connection of the device must be done by a qualified electrician.

Do not connect 230 V mains voltage instead of the sensor (it leads to failure of the thermostat).

Before the installation (dismantling) and connection (disconnection) of the device, turn off voltage supply and also act according to the «Rules of an arrangement of electric installations».

Do not immerse the sensor with a connecting wire in the liquid medium.

Do not switch the non assembled device to the network.

Turning on and off or and configure the device should be with dry hands.

Do not connect the device to the network disassembled.

Avoid hitting of water or moisture to the device.

Do not expose the device to extreme temperatures (higher than 40 ºC or below –5 °C) and high humidity.

Never clean the device with the use of chemicals such as benzene, solvents.

Do not store the device and do not use it in areas with the dust.

Do not attempt to disassemble and repair the device.

Do not exceed the landmarks value adaptor and power.

To protect against overvoltage caused by lightning discharges, use a lightning protector.

Protect the children from games with the working device, it is dangerous.

81.5_220708

Low Voltage Directive 2014/35/EU
EMC Directive 2014/30/EU

Manufacturer and vendor: DS ELECTRONICS, LTD
04136, Ukraine, Kyiv region, Kyiv, 1–3 Pivnichno-Syretska str.
+38 (091) 481-91-81, Service Center: +38 (091) 481-91-81
support@dse.com.ua www.ds-electronics.com.ua/en/