ZUBR | Technical data sheet, installation and operation manual

VA-1 red

Voltammeter for professionals

Voltammeter ZUBR VA-1 red (hereinafter referred to as the device) is designed to measure the following parameters of a single-phase network: voltage, current, power (active, reactive, or apparent), and cos φ (which allows you to evaluate the power factor in your electrical network).

A log of 100 entries enables the device to record statistics and store deviations in voltage from the set limits or current overages in non-volatile memory.

All settings are saved in non-volatile memory.

IN THE BOX

Voltammeter ZUBR VA-1 red	1 piece
Technical data sheet, installation and operation manual, warranty card	1 piece
The packing box	1 piece

TECHNICAL DATA

Voltage limits (when the voltage exceeds the set limits, the event will be recorded in the fault log)	upper 242–280 V lover 120–197 V
Current limit (when the current exceeds the set limit, the event will be recorded in the fault log)	0,1–63 A
Delay time for recording in the log when the current limit is exceeded	0–240 sec
Supply voltage	not less than 100 V not more than 420 V
Power consumption	not more than 0,6 kWt*h/month
Current measurement accuracy	0,5–63 A ±0,2 A
Connection	not more than 16 mm²
Device weight	0,144 kg ±10 %
Overall dimensions (w × h × d)	36 x 85 x 66 mm
Degree of protection GOST14254	IP20

CONNECTION SCHEMES

Before the installation and operation of the device, please read by the end of this document. This will help to avoid possible danger, mistakes and misunderstandings.

Current and power measurement is performed at the phase input of the device.

The supply voltage (100–420 V, 50 Hz) is applied to terminals 1 and 3, with the phase (L) connected to terminal 1 and neutral (N) connected to terminal 3.

The connection wires for the load are connected to terminal 2 and to the neutral terminal block (not included in the package).

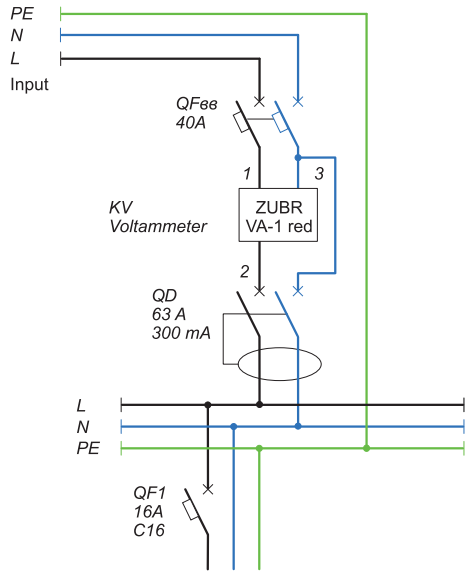

Scheme 1. Electrical circuit variant VA-1 red

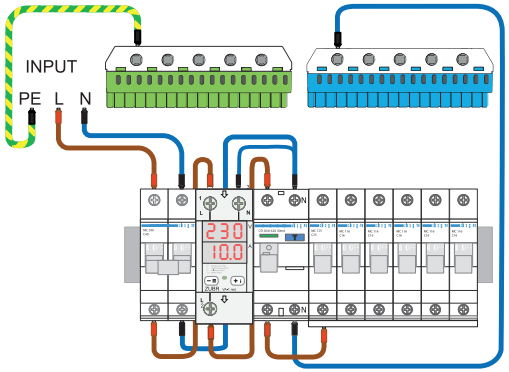

Scheme 2. Installation circuit variant VA-1 red

INSTALLATION

The device is intended for installation in an indoor environment. EXCLUDE the risk of moisture and liquids entering the installation area. The ambient temperature during operation and installation should be between –5...+45 °C.

The device is mounted in a special cabinet with a standard 35 mm DIN rail and occupies two standard modules of 18 mm each. The installation height of the device should be between 0.5...1.7 meters from the floor level. The device is installed and connected after the load has been installed and checked.

The device is installed after the protective circuit breaker (QF), which is placed in the phase wire gap (see diagrams 1 and 3). For protection against electric shock, a residual current device (QD) should be installed.

The device terminals are designed for wires with a cross-sectional area of up to 16 mm². Strip the wire ends by 10 ±0.5 mm. It is recommended to use a flexible wire that can be tightened in the terminals using a screwdriver with a blade width of no more than 6 mm, applying a torque of 2,4 N·m. A screwdriver with a blade width greater than 6 mm may cause mechanical damage to the terminals, which will result in the loss of warranty coverage.

EXPLOITATION

When turned on, the device first displays the parameter symbols, followed by the corresponding values of these parameters.

If the voltage or current exceeds the set limits, the corresponding screen will blink once per second:



exceeded the upper voltage limit



exceeded the lower voltage limit



exceeded the current limit

The green LED blinking once every 2 seconds indicates a new unread entry in the log. To view the entry, briefly press "i".

Viewing of firmware version

Hold the "i" button for 6 seconds. After releasing the button, the device will return to displaying the voltage and current in the network.

The manufacturer reserves the right to make changes to the firmware to improve the device's performance.

Reset to factory settings



Hold both the "–" and "+" buttons for 12 seconds. After releasing, the settings will be reset, and the device will reboot.

POSSIBLE PROBLEMS, CAUSES AND WAYS TO OVERCOME THEM

At turning on neither indicator nor screen do not shine

Possible cause: There is no power supply voltage.

It is necessary to: Ensure supply voltage presence.

Technical Support Chat

If you haven't found the answer, please contact our technical support engineer

dselectronics_bot
zubr_rele_official

WARRANTY TERMS

The warranty for ZUBR devices is valid for 60 months from the date of sale, provided that the instructions are followed. The warranty period for products without a warranty certificate is counted from the date of production.

If your device is not working properly, we recommend you to read the section “Possible problems” firstly. If you can not find an answer, contact Service Center. In most cases, these actions resolve all issues.

If you continue to have issues with the device, please send it to a Service Center or to the store where you purchased the device. If your device is defective due to our fault, we will repair or replace it under warranty terms within 14 business days.

Please look through the full text of the warranty and the data you need to send to your Service Center on the website https://www.ds-electronics.company. If you have a warranty case, please, contact the General distributor in your area.

ZUBR

SERVICE CENTER CONTACT:
+38 (091) 481-91-81
Viber WhatsApp Telegram
support@dse.com.ua

WARRANTY CARD

serial №:

date of sale:

a seller, a seal:

place of a seal

an owner contact for a service center:

Menu

Press the "+" button once to select the parameter you want to change.
Use the "–" and "+" buttons to adjust the value when it starts blinking.

If no buttons are pressed for 5 seconds, the device will automatically return to displaying the network voltage and current.

The "≡" button — hold for 3 seconds

Upper voltage limit
Factory setting: 242 V
Adjustment range: 242...280 V

1 time «≡»

Lower voltage limit
Factory setting: 197 V
Adjustment range: 120...197 V

2 times «≡»

Current limit
Factory setting: 10 A
Adjustment range: 0.1...63.0 A

3 times «≡»

Delay time for logging when exceeding the current limit. Used to compensate for the startup of high-power equipment.
Factory setting: 5 s
Adjustment range: 0...240 s

4 times «≡»

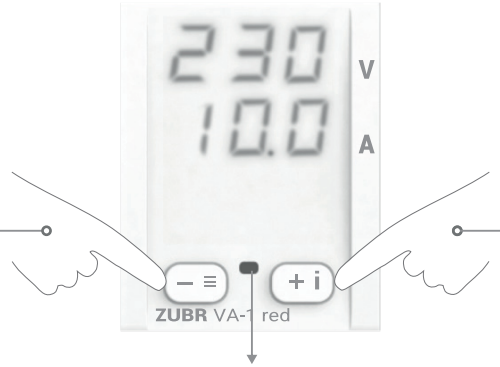

The indicator flashes 1 time every 2 seconds if a new entry in the Log has not been viewed.

The "≡" button — hold for 6 seconds

Brightness in standby mode
Factory setting: 100%
Adjustment range: 0...100%, step 10%
At 0%, a dot will be displayed on the top screen.

1 time «≡»

Voltage correction
Factory setting: 0 V
Adjustment range: ±20 V
Use if the device readings differ from your reference instrument.

2 times «≡»

Current measurement correction
Factory setting: 0.0 A ±20%
Example: for a measured current of 10 A, the maximum correction range is ±2 A.
For measured currents below 1 A, the parameter adjustment is unavailable, and the bottom screen will display dashes.

3 times «≡»

The "≡" button — press once

Viewing additional network parameters

To go to the next parameter, press "+" or "–". The selected parameter will be displayed for 30 seconds, then the device will automatically return to displaying voltage and current.

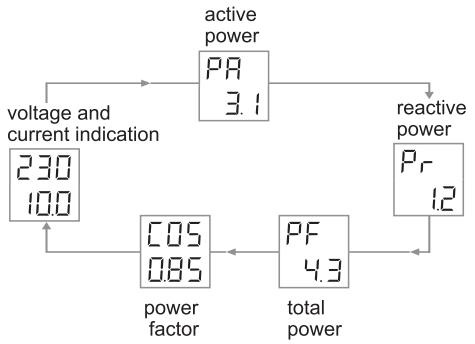

Alarm log for 100 values

The button "i" — press once

Err 25 — The log records the voltage or current values that exceeded the set limits. Reviewing the log is accompanied by the illumination of a dot in the far-right digit, and the parameter that exceeded the limits alternates with the type of violation.

– – – / – – – — If the screen displays dashes during log review, it means no entries are present in the log.

rSt — **Alarm log reset:** While viewing the log, hold the "–" and "+" buttons for 6 seconds until the "rSt" message appears. After releasing the buttons, the log will be cleared. Then, after 3 seconds, the screen will display the total number of recorded values in memory.

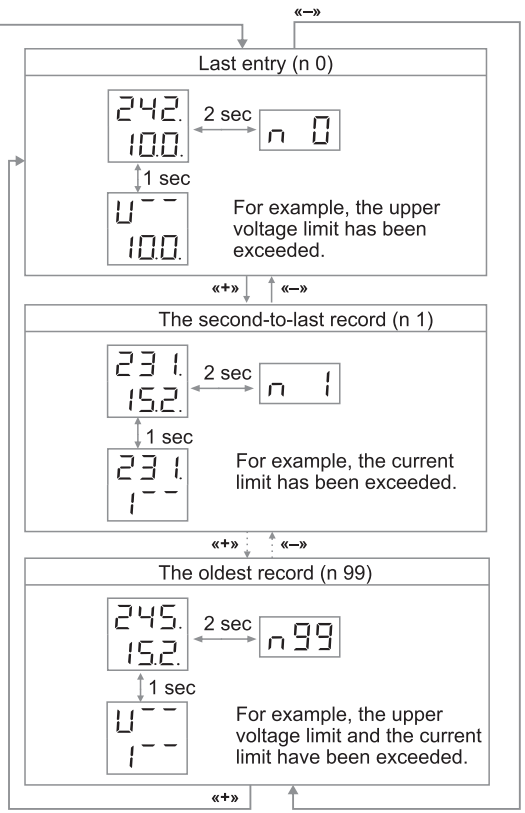

ADDITIONAL INFORMATION

Do not fire and do not throw away the device with the household waste.

After the end of its service life, the product must be disposed of in accordance with applicable law.

Transportation of goods carried in the package ensures the safety of the product.

The device can be transported by any kind of transport (rail, sea, motor, air transportation).

Date of manufacture is on the back side of device. Application time is unlimited.

The device does not contain harmful substances.

If you have any questions or something is not clear, call the Service Centre, the telephone number is listed below.

SAFETY INSTRUCTIONS

Carefully read and become aware of these instructions.

Connection of the device must be done by a qualified electrician.

Before the installation (dismantling) and connection (disconnection) of the device, turn off voltage supply and also act according to the “Rules of an arrangement of electric installations”.

Turning on and off, configure the device should be with dry hands.

Do not connect the device to the network disassembled.

Avoid hitting of water or moisture to the device.

Do not expose the device to extreme temperatures (higher than 40 °C or below –5 °C) and high humidity.

Never clean the device with the use of chemicals such as benzene, solvents.

Do not store the device and do not use it in areas with the dust.

Do not attempt to disassemble and repair the device.

Do not exceed the landmarks value adaptor and power.

To protect against overvoltage caused by lightning discharges, use a lightning protector.

Protect the children from games with the working device, it is dangerous.

version: F97 2412

EMC Directive 2014/30/EU
Low Voltage Directive 2014/35/EU

Ukraine, 04136, Kyiv region, Kyiv, 1–3 Pivnichno-Syretska str.
Sales Department: +38 (091) 481-91-81, support@dse.com.ua
www.ds-electronics.company